Dane aktualne na dzień: 25-11-2026 04:58

Link do produktu: https://www.nobshop.pl/stack-speedybee-f405-mini-35a-bls-3-6s-p-4148.html

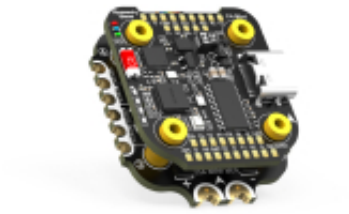

# Stack SpeedyBee F405 Mini 35A BLS 3-6S

| | |
|---|---|
| Cena brutto | **449,99 zł** |
| Cena netto | **365,85 zł** |
| Dostępność | **Aktualnie niedostępny** |
| Czas wysyłki | **1 - 3 dni** |
| Kod producenta | **SB-F4MINI-STACK** |
| Producent | **SpeedyBee** |

## Opis produktu

**Stack SpeedyBee F405 Mini 35A BLS 3-6S**


SpeedyBee
F405 MINI BLS 35A STACK
RICH FEATURES, UNBELIEVABLE PRICE!
F4 Mini
35A MINI BL
V2
Wireless FC & ESC full configuration via SpeedyBee app
Real 35A
Powerful real-labeled 35A 4-in-1 BLHeliS ESC
Onboard 4-level battery life indicators
Change motor directions wirelessly
Support DJI Air Unit O3 / Link / Vista
4x UARTs
Sufficient 4 x UARTs available
5V 2A BEC
9V 3A BEC
5V 2A & 9V 3A dual BECs
Built-in Barometer
Onboard 8MB blackbox storage
470uF Rubycon High-frequency Low-ESR capacitor
Compatible with both M2 and M3 installation hole sizes
Packed with two sets of complete M2 and M3 accessories.


F405 MINI FLIGHT
CONTROLLER
BLHELIS 35A
MINI V2 ESC
F4 Mini
SpeedyBee
35A MINI BLS

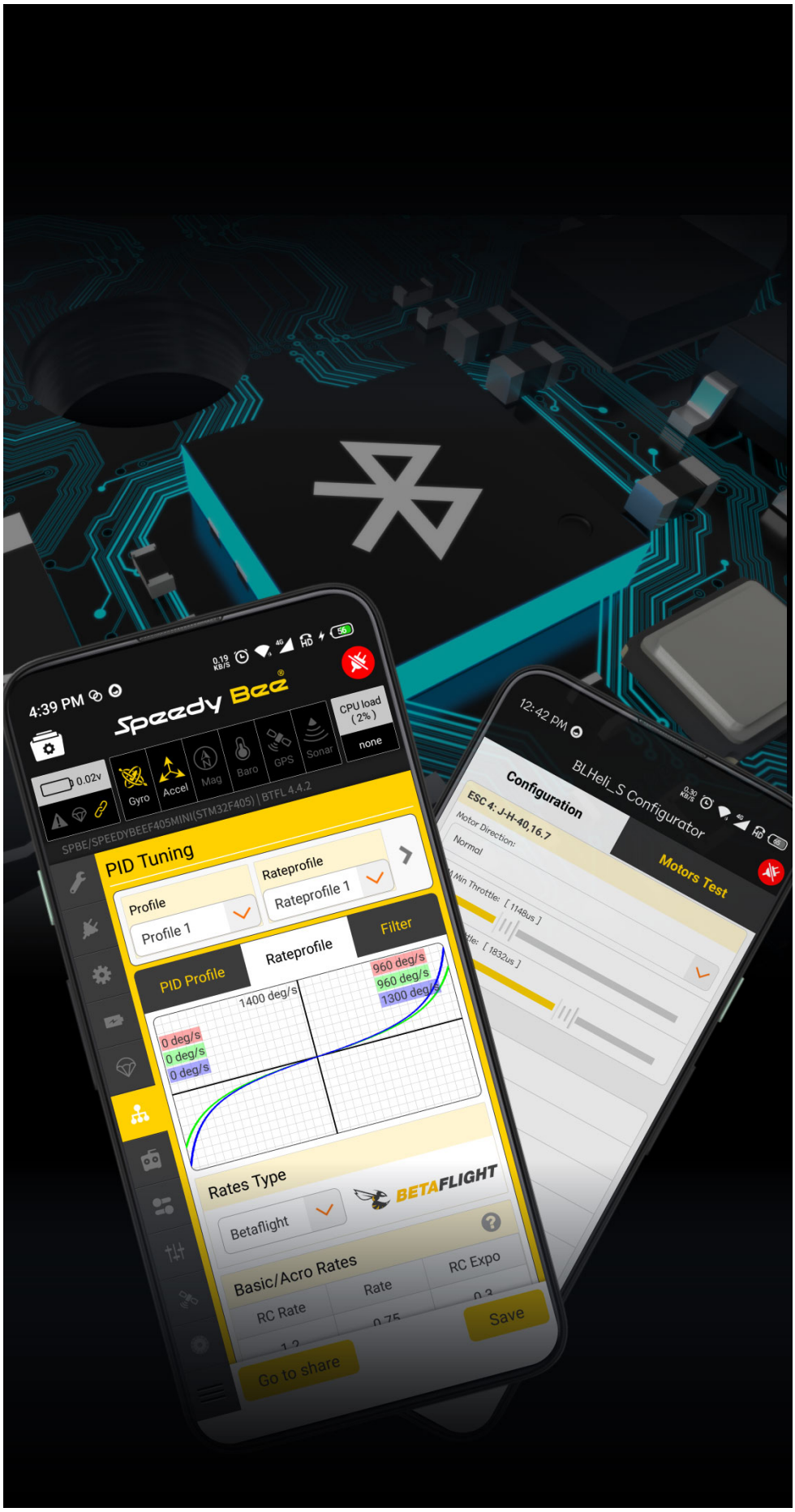
4:39 PM
Speedy Bee
CPU load ( 2% )
none
0.02v
Gyro
Accel
Mag
Baro
GPS
Sonar
SPBE/SPEEDYBEEF405MINI(STM32F405) | BTFL 4.4.2
PID Tuning
Rateprofile
Profile
Profile 1
Rateprofile 1
PID Profile
Rateprofile
Filter
1400 deg/s
960 deg/s
960 deg/s
1300 deg/s
0 deg/s
0 deg/s
0 deg/s
Rates Type
Betaflight
BETAFLIGHT
Basic/Acro Rates
RC Rate
Rate
RC Expo
Save
Go to share
12:42 PM
BLHeli_S Configurator
Configuration
Motors Test
ESC 4: J-H-40,16.7
Motor Direction:
Normal
Min Throttle: [ 1148us ]
Max Throttle: [ 1832us ]


- +12
34CN
SpeedyBee
35A MINI BLS

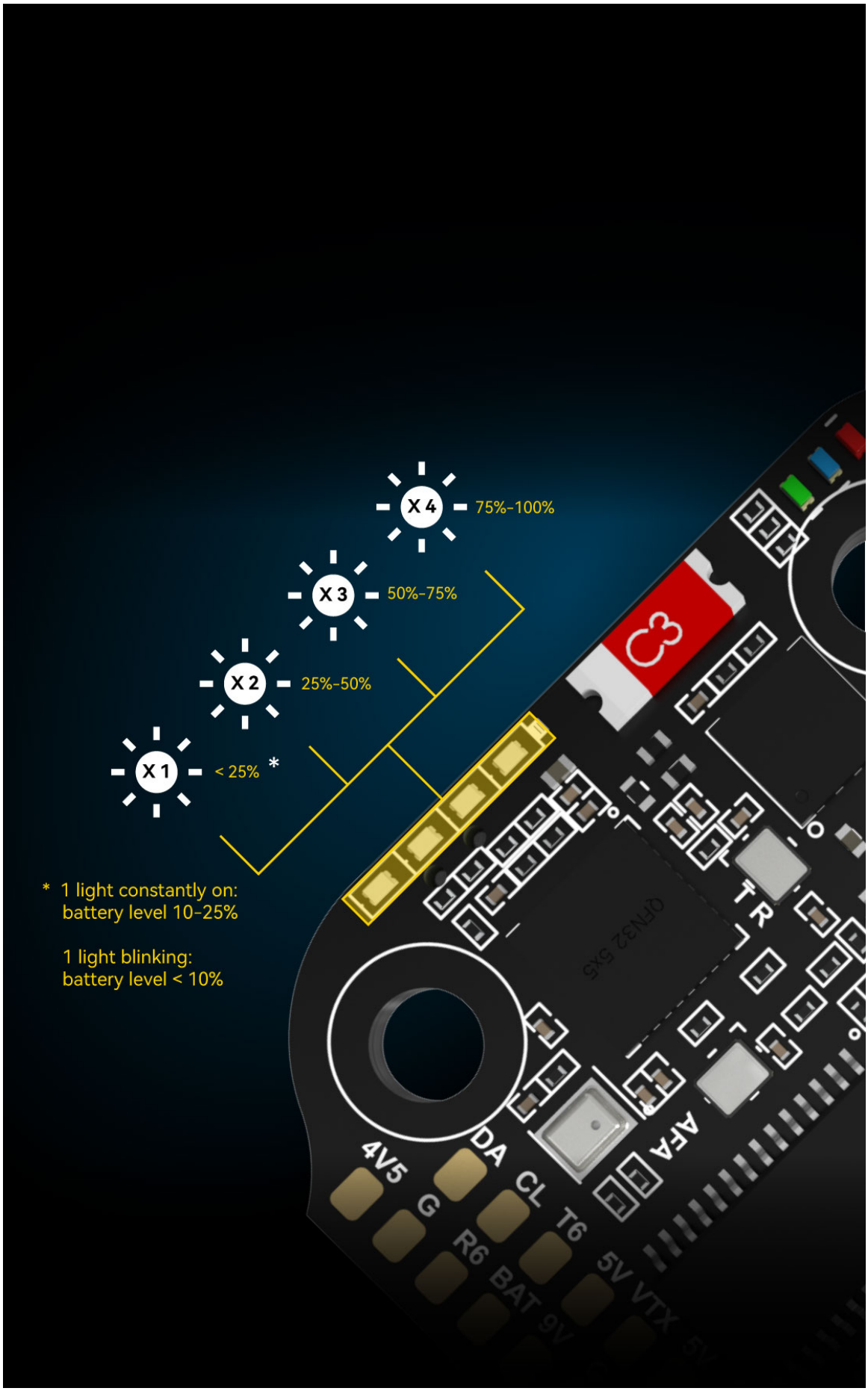
X 4
75%-100%
X 3
50%-75%
X 2
25%-50%
X 1
< 25% *
* 1 light constantly on:
battery level 10-25%
1 light blinking:
battery level < 10%
C3
TR
AFA
4V5
G
DA
CL
T6
R6
BAT 9V
5V VTX

# Dimensions

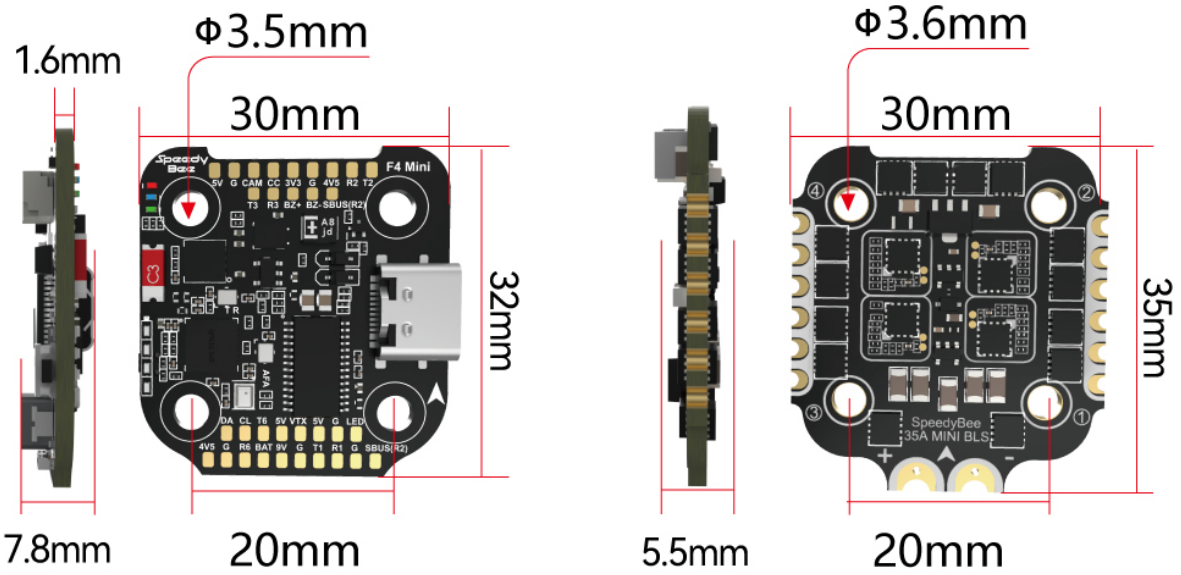
1.6mm
Φ3.5mm
30mm
32mm
7.8mm
20mm
Φ3.6mm
30mm
35mm
5.5mm
20mm
F4 Mini
SpeedyBee
35A MINI BLS

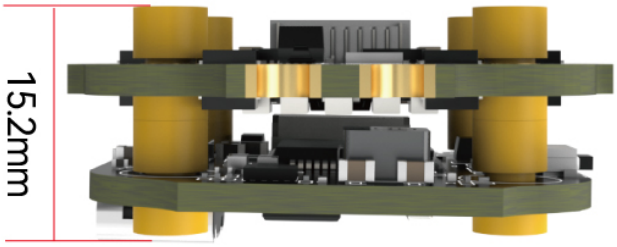
15.2mm

# Dimensions

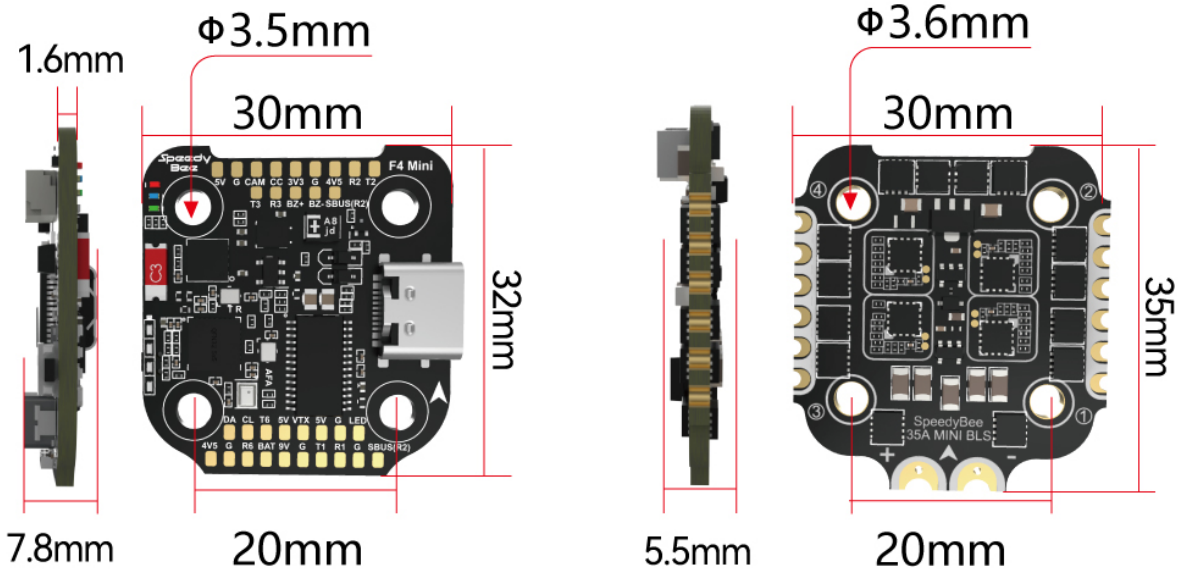
Φ3.5mm
1.6mm
30mm
32mm
7.8mm
20mm
Φ3.6mm
30mm
35mm
5.5mm
20mm
F4 Mini
SpeedyBee
35A MINI BLS

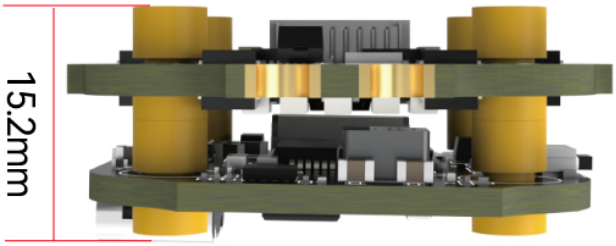
15.2mm

# Wiring Diagram

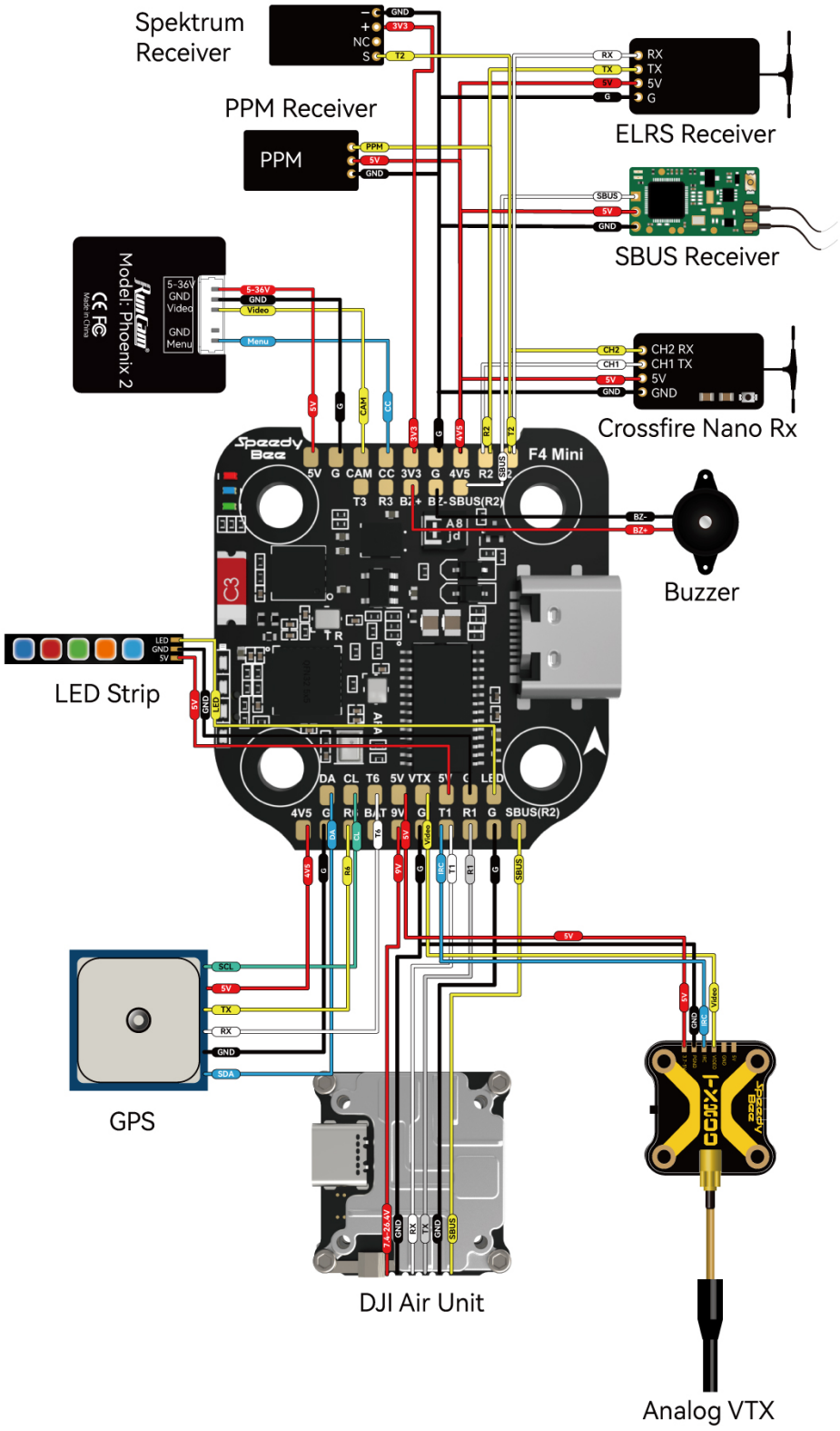

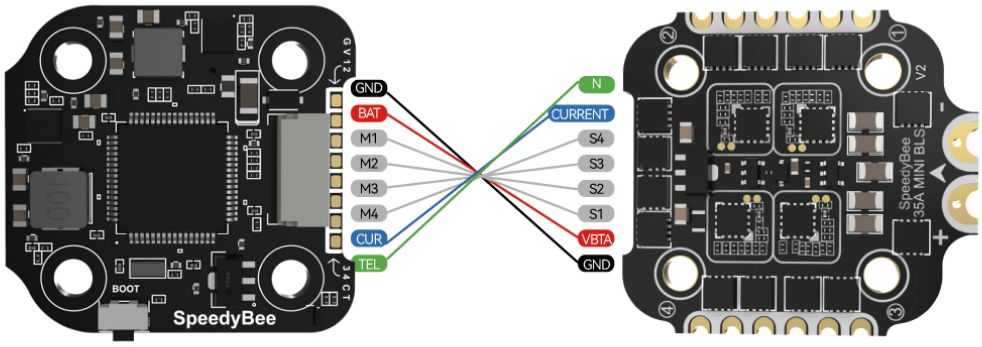


F405 Mini Flight Controller

BLS 35A Mini V2 4-in-1 ESC

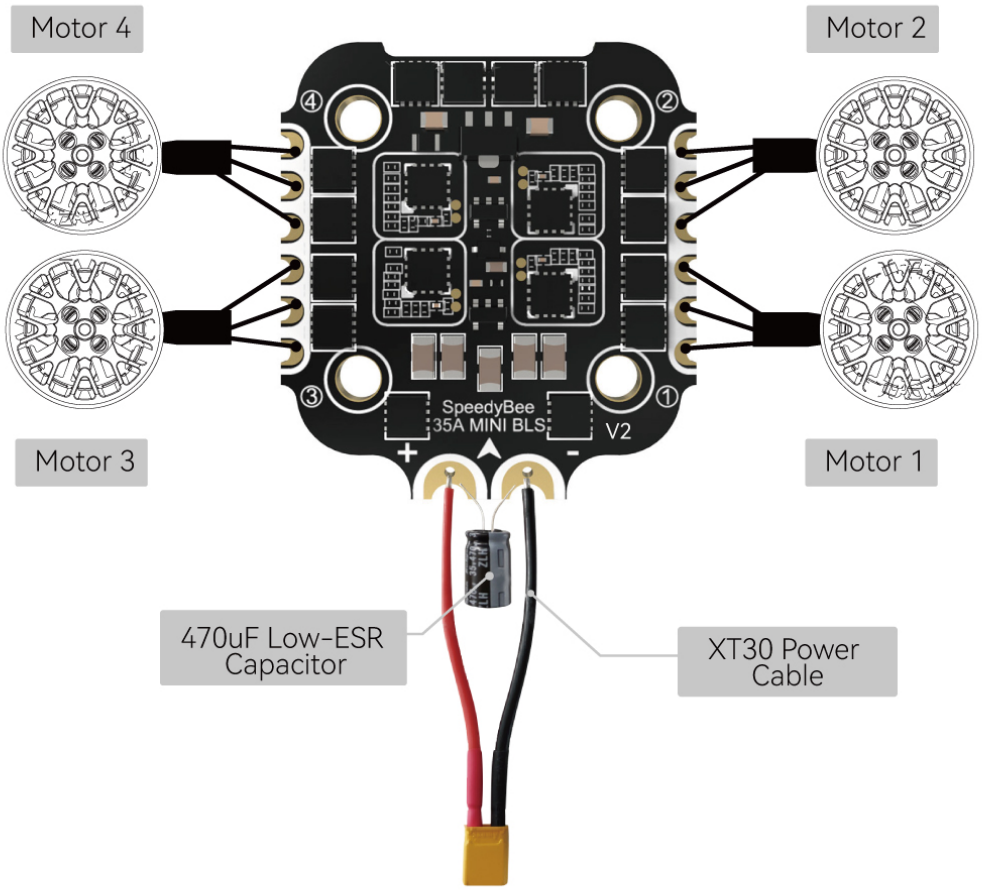


Note: In order to prevent the stack from being burnt out by voltage spikes on powering up, it is strongly recommended to use the Low ESR capacitor in the package.