Dane aktualne na dzień: 29-11-2026 19:52

Link do produktu: https://www.nobshop.pl/silnik-emax-eco-ii-series-2306-p-2509.html



Silnik Emax ECO II Series 2306

Cena brutto	**69,99 zł**
Cena netto	**56,90 zł**
Cena poprzednia	~~**109,00 zł**~~
Dostępność	**Dostępny**
Czas wysyłki	**1 - 3 dni**
Producent	**EMAX**

Opis produktu

Silnik Emax ECO II Series 2306

Silniki Emax ECO II to już druga odsłona popularnych budżetowych silników od marki Emax. Silniki te są cenione przez wielu pilotów za sprawą ich wytrzymałości oraz stosunku jakości do proponowanej ceny. Nowa seria Eco II posiada większe magnesy w porównaniu z ich poprzednią serią co przekłada się na bardziej responsywne reakcje oraz większą ilość obrotów na 1V. Oprócz tego generowany jest większy moment obrotowy oraz ciąg.

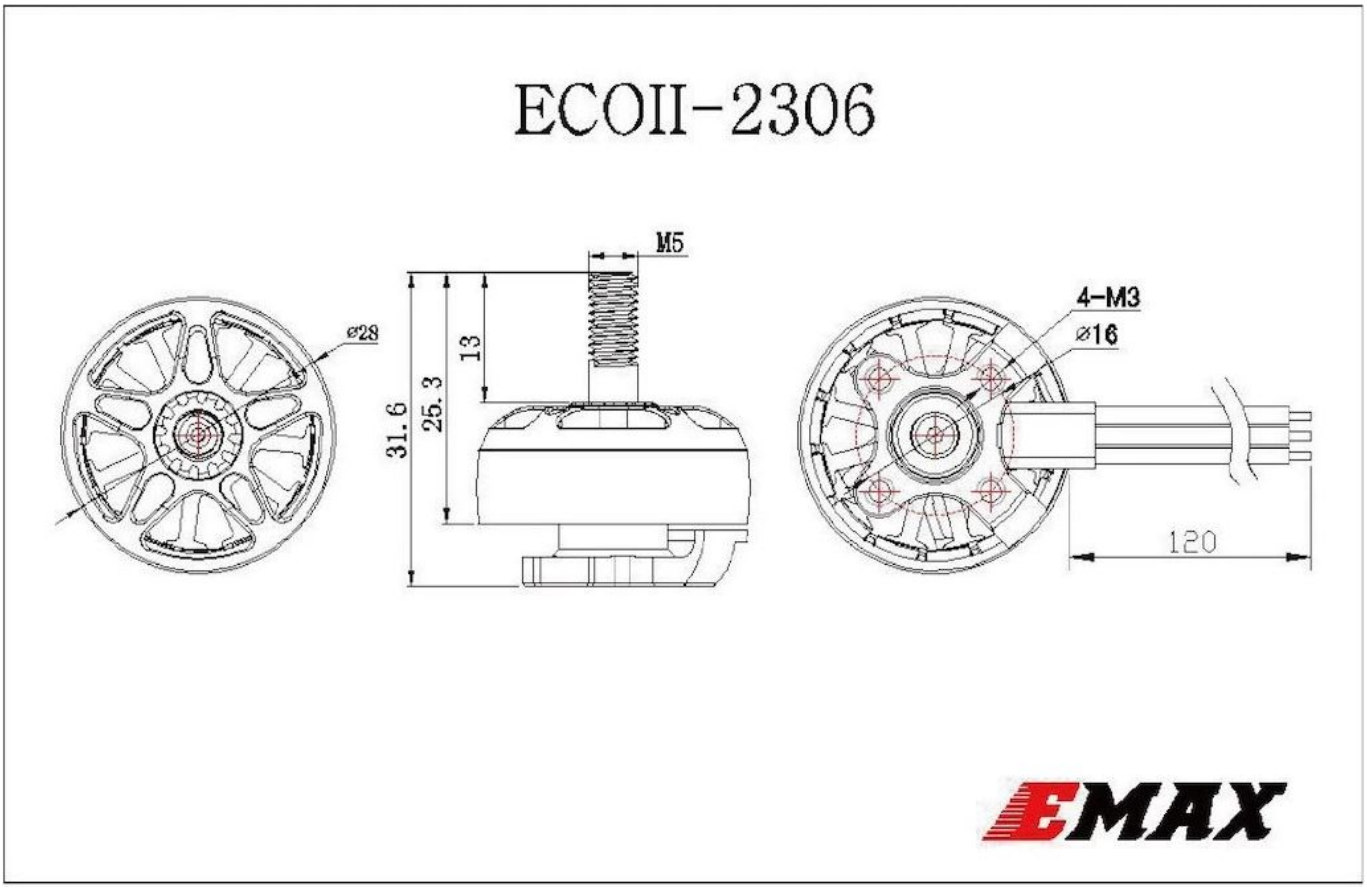

ECOII 2306 1700KV

Motor type	The voltage (V)	Propeller	current (A)	thrust (G)	power (W)	efficiency (G/W)	speed (RPM)
ECOII2306-1700KV	25.2	DALPROP Cyclone 5040	2.8	300	70.56	4.25	15700
	25.2		5.4	500	136.08	3.67	20100
	25.2		8.5	700	214.20	3.27	23400
	25.2		23.5	1500	592.20	2.53	Max

Motor type	The voltage (V)	Propeller	current (A)	thrust (G)	power (W)	efficiency (G/W)	speed (RPM)
ECOII2306-1700KV	25.2	DALPROP Cyclone 5050	2.9	300	73.08	4.11	13200
	25.2		5.6	500	141.12	3.54	16700
	25.2		9.4	700	236.88	2.96	19800
	25.2		34.8	1710	876.96	1.95	Max

Motor type	The voltage (V)	Propeller	current (A)	thrust (G)	power (W)	efficiency (G/W)	speed (RPM)
ECOII2306-1700KV	25.2	DALPROP Cyclone 5046	2.9	300	73.08	4.11	13900
	25.2		5.5	500	138.60	3.61	17800
	25.2		8.8	700	221.76	3.16	20600
	25.2		30.5	1690	768.60	2.20	Max

Motor type	The voltage (V)	Propeller	current (A)	thrust (G)	power (W)	efficiency (G/W)	speed (RPM)
ECOII2306-1700KV	25.2	HQ 5.5*4*3	2.6	300	65.52	4.58	12700
	25.2		5	500	126.00	3.97	16100
	25.2		7.9	700	199.08	3.52	18900
	25.2		31.8	1850	801.36	2.31	Max

Motor type	The voltage (V)	Propeller	current (A)	thrust (G)	power (W)	efficiency (G/W)	speed (RPM)
ECOII2306-1700KV	25.2	HQ 5*4.3*3	2.7	300	68.04	4.41	13900
	25.2		5.2	500	131.04	3.82	17700
	25.2		8.5	700	214.20	3.27	21100
	25.2		26.8	1670	675.36	2.47	Max

Motor type	The voltage (V)	Propeller	current (A)	thrust (G)	power (W)	efficiency (G/W)	speed (RPM)
ECOII2306-1700KV	25.2	HQ 5*4.8*3	2.8	300	70.56	4.25	14000
	25.2		5.5	500	138.60	3.61	17700
	25.2		8.2	700	206.64	3.39	21000
	25.2		29.4	1680	740.88	2.27	Max

Motor type	The voltage (V)	Propeller	current (A)	thrust (G)	power (W)	efficiency (G/W)	speed (RPM)
ECOII2306-1700KV	25.2	GF 5045-3	2.8	300	70.56	4.25	14800
	25.2		5.4	500	136.08	3.67	19000
	25.2		8.6	700	216.72	3.23	22300
	25.2		27.1	1570	682.92	2.30	Max

ECOII 2306 1900KV

Motor type	The voltage (V)	Propeller	current (A)	thrust (G)	power (W)	efficiency (G/W)	speed (RPM)
ECOII2306-1900KV	25.2	DALPROP Cyclone 5040	3	300	75.60	3.97	15800
	25.2		5.8	500	146.16	3.42	20200
	25.2		9.1	700	229.32	3.05	23500
	25.2		33.2	1780	836.64	2.13	Max

Motor type	The voltage (V)	Propeller	current (A)	thrust (G)	power (W)	efficiency (G/W)	speed (RPM)
ECOII2306-1900KV	25.2	DALPROP Cyclone 5050	2.8	300	70.56	4.25	12580
	25.2		5.6	500	141.12	3.54	16340
	25.2		9.5	700	239.40	2.92	19100
	25.2		45.8	1990	1154.16	1.72	Max

Motor type	The voltage (V)	Propeller	current (A)	thrust (G)	power (W)	efficiency (G/W)	speed (RPM)
ECOII2306-1900KV	25.2	DALPROP Cyclone 5046	2.9	300	73.08	4.11	12700
	25.2		5.7	500	143.64	3.48	17700
	25.2		9.4	700	236.88	2.96	20800
	25.2		41.4	1970	1043.28	1.89	Max

Motor type	The voltage (V)	Propeller	current (A)	thrust (G)	power (W)	efficiency (G/W)	speed (RPM)
ECOII2306-1900KV	25.2	HQ 5*4.3*3	2.8	300	70.56	4.25	13900
	25.2		5.3	500	133.56	3.74	17700
	25.2		8.7	700	219.24	3.19	20900
	25.2		36.8	1930	927.36	2.08	Max

Motor type	The voltage (V)	Propeller	current (A)	thrust (G)	power (W)	efficiency (G/W)	speed (RPM)
ECOII2306-1900KV	25.2	HQ 5*4.8*3	2.9	300	73.08	4.11	13600
	25.2		5.7	500	143.64	3.48	17700
	25.2		9.2	700	231.84	3.02	19700
	25.2		38.8	1960	977.76	2.00	Max

Motor type	The voltage (V)	Propeller	current (A)	thrust (G)	power (W)	efficiency (G/W)	speed (RPM)
ECOII2306-1900KV	25.2	GF 5045-3	2.9	300	73.08	4.11	15100
	25.2		5.5	500	138.60	3.61	19000
	25.2		9	700	226.80	3.09	22500
	25.2		36.4	1860	917.28	2.03	Max

ECOII 2306 2400KV

Motor type	The voltage (V)	Propeller	current (A)	thrust (G)	power (W)	efficiency (G/W)	speed (RPM)
ECOII2306-2400KV	16.8	DALPROP Cyclone 5040	4.2	300	70.56	4.25	15700
	16.8		8.3	500	139.44	3.59	19700
	16.8		13.4	700	225.12	3.11	23420
	16.8		28.8	1290	483.84	2.67	Max

Motor type	The voltage (V)	Propeller	current (A)	thrust (G)	power (W)	efficiency (G/W)	speed (RPM)
ECOII2306-2400KV	16.8	DALPROP Cyclone 5050	4.3	300	72.24	4.15	12850
	16.8		8.8	500	147.84	3.38	16600
	16.8		14.8	700	248.64	2.82	19700
	16.8		43.5	1480	730.80	2.03	Max

Motor type	The voltage (V)	Propeller	current (A)	thrust (G)	power (W)	efficiency (G/W)	speed (RPM)
ECOII2306-2400KV	16.8	DALPROP Cyclone 5046	4.2	300	70.56	4.25	13900
	16.8		8.4	500	141.12	3.54	17600
	16.8		13.7	700	230.16	3.04	20600
	16.8		36.8	1480	618.24	2.39	Max

Motor type	The voltage (V)	Propeller	current (A)	thrust (G)	power (W)	efficiency (G/W)	speed (RPM)
ECOII2306-2400KV	16.8	HQ 5.5*4*3	3.8	300	63.84	4.70	12600
	16.8		7.5	500	126.00	3.97	15900
	16.8		12.3	700	206.64	3.39	18700
	16.8		39.8	1620	668.64	2.42	Max

Motor type	The voltage (V)	Propeller	current (A)	thrust (G)	power (W)	efficiency (G/W)	speed (RPM)
ECOII2306-2400KV	16.8	HQ 5*4.3*3	4.2	300	70.56	4.25	13900
	16.8		8.1	500	136.08	3.67	17870
	16.8		12.9	700	216.72	3.23	21400
	16.8		32.4	1410	544.32	2.59	Max

Motor type	The voltage (V)	Propeller	current (A)	thrust (G)	power (W)	efficiency (G/W)	speed (RPM)
ECOII2306-2400KV	16.8	HQ 5*4.8*3	4.1	300	68.88	4.36	13800
	16.8		8.4	500	141.12	3.54	17800
	16.8		13.6	700	228.48	3.06	21200
	16.8		35.3	1490	593.04	2.51	Max

Motor type	The voltage (V)	Propeller	current (A)	thrust (G)	power (W)	efficiency (G/W)	speed (RPM)
ECOII2306-2400KV	16.8	GF 5045-3	4.2	300	70.56	4.25	15300
	16.8		8.3	500	139.44	3.59	19200
	16.8		13.3	700	223.44	3.13	22800
	16.8		32.7	1380	549.36	2.51	Max

Specyfikacja:

Marka - Emax
Model - Eco II series
Rozmiar - 2306
Ilość kv - 1700/1900/2400
Długość przewodów - 120mm
Otwory montażowe - 4x M3

Produkt posiada dodatkowe opcje:

KV: 1700KV , 1900KV