Dane aktualne na dzień: 09-08-2025 07:57

Link do produktu: https://www.nobshop.pl/silnik-emax-eco-ii-series-2207-p-2507.html

Silnik Emax ECO II Series 2207

Cena brutto	**89,99 zł**
Cena netto	**73,16 zł**
Cena poprzednia	~~**109,00 zł**~~
Dostępność	**Dostępny**
Czas wysyłki	**1 - 3 dni**
Producent	**EMAX**

Opis produktu

Silnik Emax ECO II Series 2207

Silniki Emax ECO II to już druga odsłona popularnych budżetowych silników od marki Emax. Silniki te są cenione przez wielu pilotów za sprawą ich wytrzymałości oraz stosunku jakości do proponowanej ceny. Nowa seria Eco II posiada większe magnesy w porównaniu z ich poprzednią serią co przekłada się na bardziej responsywne reakcje oraz większą ilość obrotów na 1V. Oprócz tego generowany jest większy moment obrotowy oraz ciąg.

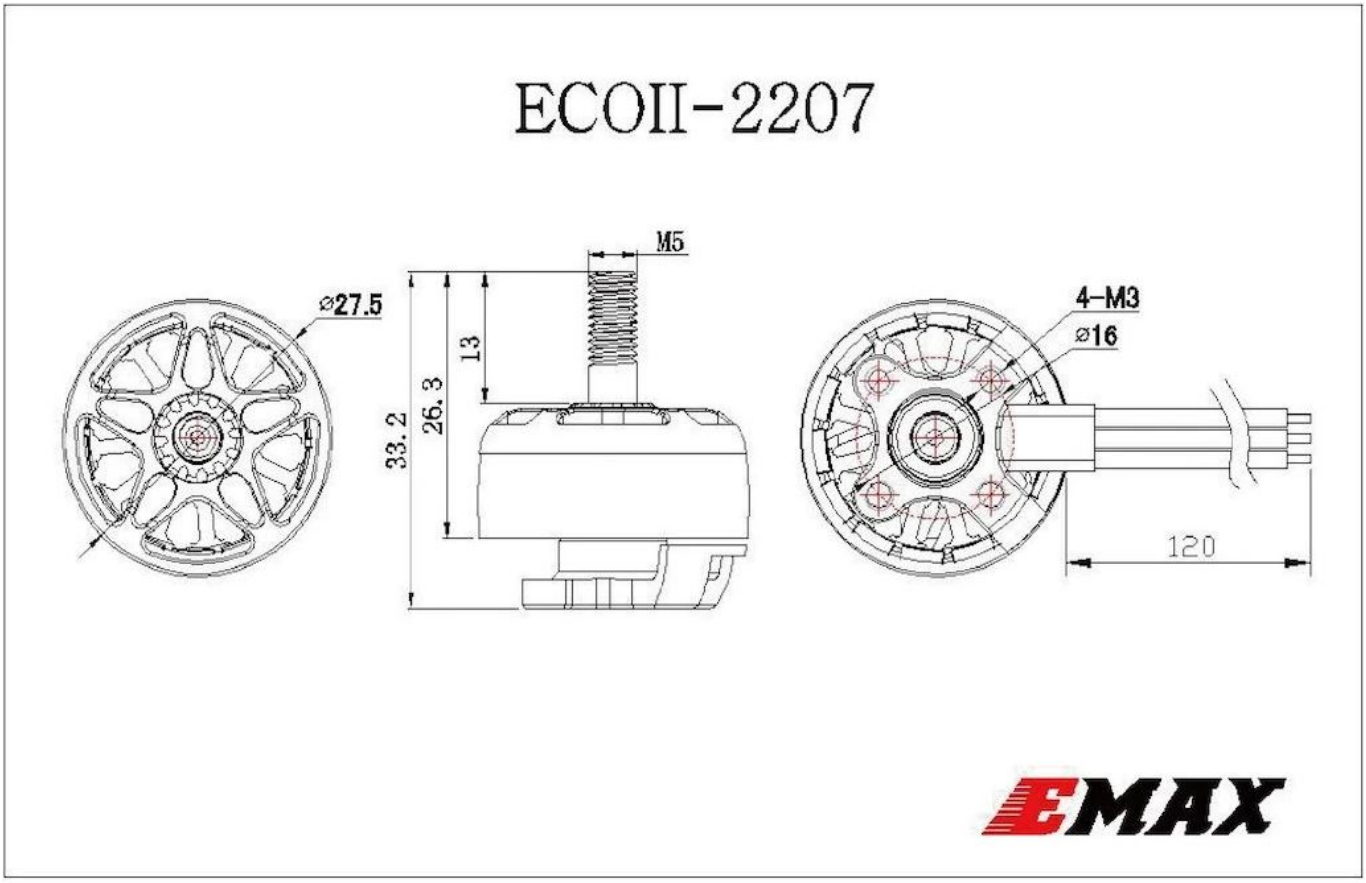
ECOII-2207
M5
⌀27.5
13
26.3
33.2
4-M3
⌀16
120
EMAX

ECOII 2207 1700KV

Motor type	The voltage (V)	Propeller	current (A)	thrust (G)	power (W)	efficiency (G/W)	speed (RPM)
ECOII2207-1700KV	25.2	DALPROP Cyclone 5040	2.9	300	73.08	4.11	15800
	25.2		5.3	500	133.56	3.74	19900
	25.2		8.4	700	211.68	3.31	23600
	25.2		26.2	1610	660.24	2.44	Max

Motor type	The voltage (V)	Propeller	current (A)	thrust (G)	power (W)	efficiency (G/W)	speed (RPM)
ECOII2207-1700KV	25.2	DALPROP Cyclone 5050	2.8	300	70.56	4.25	12900
	25.2		5.7	500	143.64	3.48	16800
	25.2		9.4	700	236.88	2.96	19700
	25.2		35.8	1850	902.16	2.05	Max

Motor type	The voltage (V)	Propeller	current (A)	thrust (G)	power (W)	efficiency (G/W)	speed (RPM)
ECOII2207-1700KV	25.2	DALPROP Cyclone 5046	2.7	300	68.04	4.41	13900
	25.2		5.5	500	138.60	3.61	17700
	25.2		8.7	700	219.24	3.19	20800
	25.2		34.6	1830	871.92	2.10	Max

Motor type	The voltage (V)	Propeller	current (A)	thrust (G)	power (W)	efficiency (G/W)	speed (RPM)
ECOII2207-1700KV	25.2	HQ 5.5*4*3	2.6	300	65.52	4.58	12500
	25.2		4.9	500	123.48	4.05	16100
	25.2		7.9	700	199.08	3.52	18800
	25.2		35.8	1980	902.16	2.19	Max

Motor type	The voltage (V)	Propeller	current (A)	thrust (G)	power (W)	efficiency (G/W)	speed (RPM)
ECOII2207-1700KV	25.2	HQ 5*4.3*3	2.7	300	68.04	4.41	13900
	25.2		5.3	500	133.56	3.74	18300
	25.2		8.6	700	216.72	3.23	21800
	25.2		28.8	1780	725.76	2.45	Max

Motor type	The voltage (V)	Propeller	current (A)	thrust (G)	power (W)	efficiency (G/W)	speed (RPM)
ECOII2207-1700KV	25.2	HQ 5*4.8*3	2.8	300	70.56	4.25	13800
	25.2		5.5	500	138.60	3.61	17900
	25.2		8.5	700	214.20	3.27	21100
	25.2		30.7	1820	773.64	2.35	Max

Motor type	The voltage (V)	Propeller	current (A)	thrust (G)	power (W)	efficiency (G/W)	speed (RPM)
ECOII2207-1700KV	25.2	GF 5045-3	2.8	300	70.56	4.25	14800
	25.2		5.5	500	138.60	3.61	19000
	25.2		8.8	700	221.76	3.16	22200
	25.2		29.2	1720	735.84	2.34	Max

ECOII 2207 1900KV

Motor type	The voltage (V)	Propeller	current (A)	thrust (G)	power (W)	efficiency (G/W)	speed (RPM)
ECOII2207-1900KV	25.2	DALPROP Cyclone 5040	3.2	300	80.64	3.72	15900
	25.2		5.2	500	131.04	3.82	19900
	25.2		9.3	700	234.36	2.99	23600
	25.2		32.6	1860	821.52	2.26	Max

Motor type	The voltage (V)	Propeller	current (A)	thrust (G)	power (W)	efficiency (G/W)	speed (RPM)
ECOII2207-1900KV	25.2	DALPROP Cyclone 5050	3	300	75.60	3.97	13200
	25.2		5.8	500	146.16	3.42	16800
	25.2		9.6	700	241.92	2.89	19700
	25.2		43.8	1980	1103.76	1.79	Max

Motor type	The voltage (V)	Propeller	current (A)	thrust (G)	power (W)	efficiency (G/W)	speed (RPM)
ECOII2207-1900KV	25.2	DALPROP Cyclone 5046	2.8	300	70.56	4.25	13800
	25.2		5.5	500	138.60	3.61	17500
	25.2		8.9	700	224.28	3.12	20500
	25.2		40.6	2020	1023.12	1.97	Max

Motor type	The voltage (V)	Propeller	current (A)	thrust (G)	power (W)	efficiency (G/W)	speed (RPM)
ECOII2207-1900KV	25.2	HQ 5*4.3*3	3	300	75.60	3.97	14100
	25.2		5.4	500	136.08	3.67	17800
	25.2		8.8	700	221.76	3.16	21700
	25.2		36.4	1960	917.28	2.14	Max

Motor type	The voltage (V)	Propeller	current (A)	thrust (G)	power (W)	efficiency (G/W)	speed (RPM)
ECOII2207-1900KV	25.2	HQ 5*4.8*3	2.9	300	73.08	4.11	14000
	25.2		5.7	500	143.64	3.48	18100
	25.2		9.1	700	229.32	3.05	21100
	25.2		41.6	1970	1048.32	1.88	Max

Motor type	The voltage (V)	Propeller	current (A)	thrust (G)	power (W)	efficiency (G/W)	speed (RPM)
ECOII2207-1900KV	25.2	GF 5045-3	2.8	300	70.56	4.25	14900
	25.2		5.8	500	146.16	3.42	19200
	25.2		9.2	700	231.84	3.02	22800
	25.2		37.2	1890	937.44	2.02	Max

ECOII 2207 2400KV

Motor type	The voltage (V)	Propeller	current (A)	thrust (G)	power (W)	efficiency (G/W)	speed (RPM)
ECOII2207-2400KV	16.8	DALPROP Cyclone 5040	4.7	300	78.96	3.80	15700
	16.8		8.6	500	144.48	3.46	20100
	16.8		14.2	700	238.56	2.93	23600
	16.8		31.6	1380	530.88	2.60	Max

Motor type	The voltage (V)	Propeller	current (A)	thrust (G)	power (W)	efficiency (G/W)	speed (RPM)
ECOII2207-2400KV	16.8	DALPROP Cyclone 5050	4.7	300	78.96	3.80	13100
	16.8		9.8	500	164.64	3.04	16800
	16.8		15.6	700	262.08	2.67	19700
	16.8		41.8	1610	702.24	2.29	Max

Motor type	The voltage (V)	Propeller	current (A)	thrust (G)	power (W)	efficiency (G/W)	speed (RPM)
ECOII2207-2400KV	16.8	DALPROP Cyclone 5046	4.6	300	77.28	3.88	14000
	16.8		8.9	500	149.52	3.34	17700
	16.8		14.4	700	241.92	2.89	20900
	16.8		38.2	1530	641.76	2.38	Max

Motor type	The voltage (V)	Propeller	current (A)	thrust (G)	power (W)	efficiency (G/W)	speed (RPM)
ECOII2207-2400KV	16.8	HQ 5.5*4*3	4.1	300	68.88	4.36	12600
	16.8		8.4	500	141.12	3.54	15900
	16.8		13.8	700	231.84	3.02	19100
	16.8		40.8	1760	685.44	2.57	Max

Motor type	The voltage (V)	Propeller	current (A)	thrust (G)	power (W)	efficiency (G/W)	speed (RPM)
ECOII2207-2400KV	16.8	HQ 5*4.3*3	4.4	300	73.92	4.06	14200
	16.8		8.9	500	149.52	3.34	18100
	16.8		13.8	700	231.84	3.02	21200
	16.8		34.5	1490	579.60	2.57	Max

Motor type	The voltage (V)	Propeller	current (A)	thrust (G)	power (W)	efficiency (G/W)	speed (RPM)
ECOII2207-2400KV	16.8	HQ 5*4.8*3	4.6	300	77.28	3.88	13800
	16.8		8.9	500	149.52	3.34	17900
	16.8		14.1	700	236.88	2.96	21000
	16.8		36.8	1580	618.24	2.56	Max

Motor type	The voltage (V)	Propeller	current (A)	thrust (G)	power (W)	efficiency (G/W)	speed (RPM)
ECOII2207-2400KV	16.8	GF 5045-3	4.5	300	75.60	3.97	14800
	16.8		8.8	500	147.84	3.38	18800
	16.8		13.8	700	231.84	3.02	22100
	16.8		33.9	1490	569.52	2.62	Max

Specyfikacja:

Marka - Emax
Model - Eco II series
Rozmiar - 2207
Ilość kv - 1700/1900/2400
Długość przewodów - 120mm
Otwory montażowe - 4x M3

Produkt posiada dodatkowe opcje:

KV: 1900KV