Dane aktualne na dzień: 23-11-2026 13:55

Link do produktu: https://www.nobshop.pl/matek-elrs-crsf-to-pwm-c-konwerter-p-4027.html

Matek ELRS CRSF to PWM-C konwerter

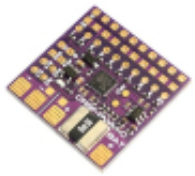

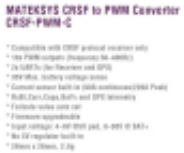

Cena brutto	**55,00 zł**
Cena netto	**44,72 zł**
Dostępność	**Aktualnie niedostępny**
Czas wysyłki	**1 - 3 dni**
Producent	**Matek Systems**

Opis produktu

Matek ELRS CRSF to PWM-C konwerter

Specyfikacja:

- **Compatible with CRSF protocol receiver only**
- **Support any CRSF protocol receivers (including 433MHz, 868MHz, 915MHz, 2.4GHz)**
- 10x PWM outputs
- PWM frequency configurable (50Hz default, 100,160,330, 400Hz)
- 2x UARTs (for Receiver and GPS)
- Telemetry ID: RxBt, Curr, Capa, Bat%, GPS, GSpd, Hdg, Alt, Sats
- 36V Max. battery voltage sense (1K:10K voltage divider built-in)
- **Current sensor built-in (90A continuous /220A Peak), current scale = 150 by default**
- Vbat and Current sensor scale configurable
- Failsafe value auto set
- Firmware upgradeable
- Rated voltage: 4~9V @5V pad, 0~36V @BAT+
- **No 5V regulator built-in, Servos must be powered via 5V pad by external 5V source.**
- 26mm x 26mm, 2.8g
- Packing: 1x CRSF-PWM-C, 1x low ESR capacitor, Dupont 2.54 pins

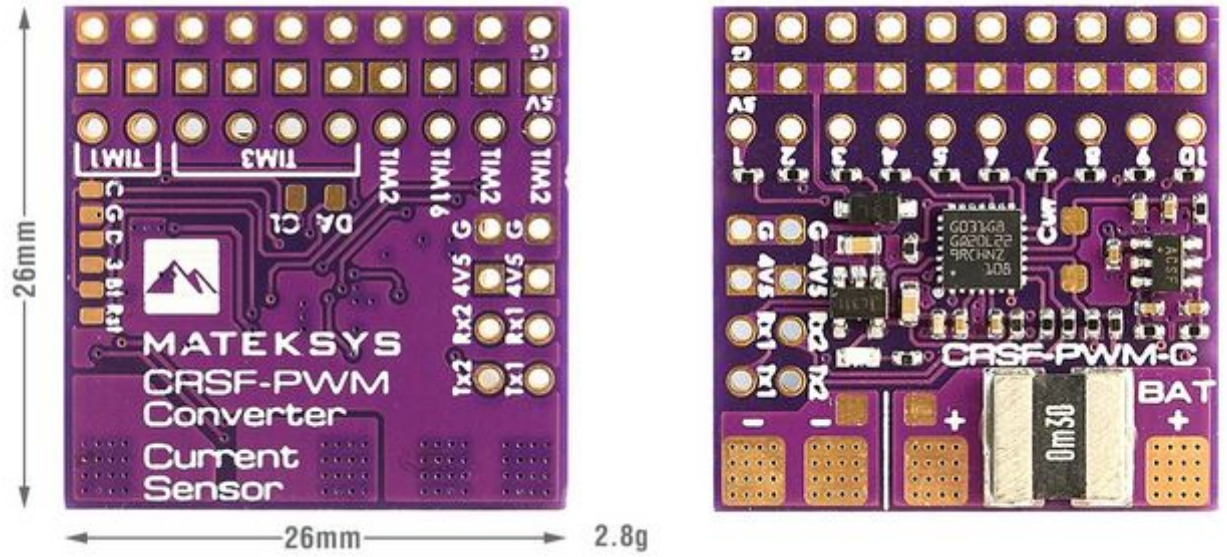
26mm
MATEKSYS
CRSF-PWM
Converter
Current
Sensor
26mm
2.8g
CRSF-PWM-C
BAT

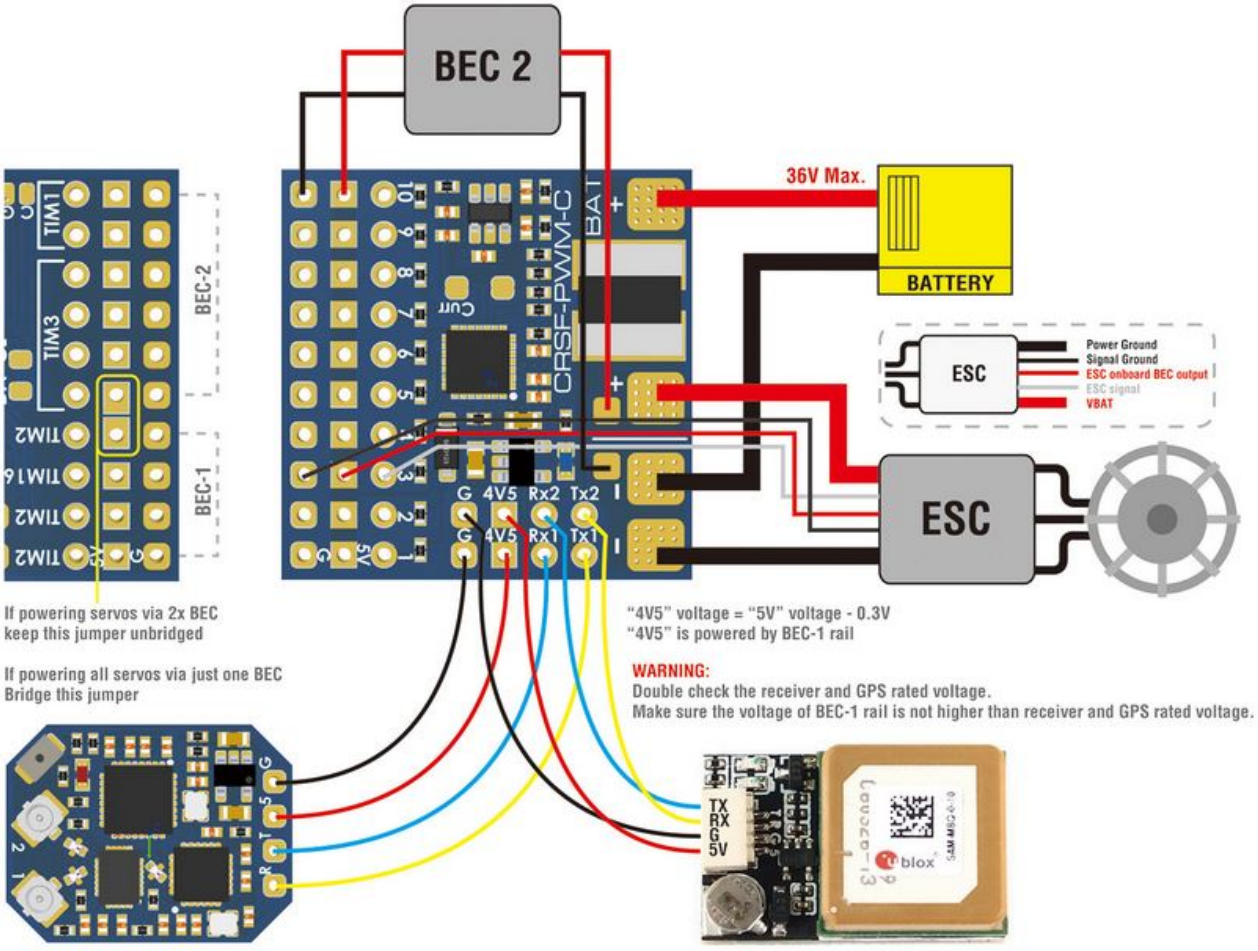
BEC 2
36V Max.
BATTERY
ESC
Power Ground
Signal Ground
ESC onboard BEC output
ESC signal
VBAT
ESC
BEC-2
BEC-1
CRSF-PWM-C
BAT
G 4V5 Rx2 Tx2
G 4V5 Rx1 Tx1
If powering servos via 2x BEC
keep this jumper unbridged
If powering all servos via just one BEC
Bridge this jumper
"4V5" voltage = "5V" voltage - 0.3V
"4V5" is powered by BEC-1 rail
WARNING:
Double check the receiver and GPS rated voltage.
Make sure the voltage of BEC-1 rail is not higher than receiver and GPS rated voltage.
TX
RX
G
5V
blox